FTST INSTALLATION INSTRUCTIONS

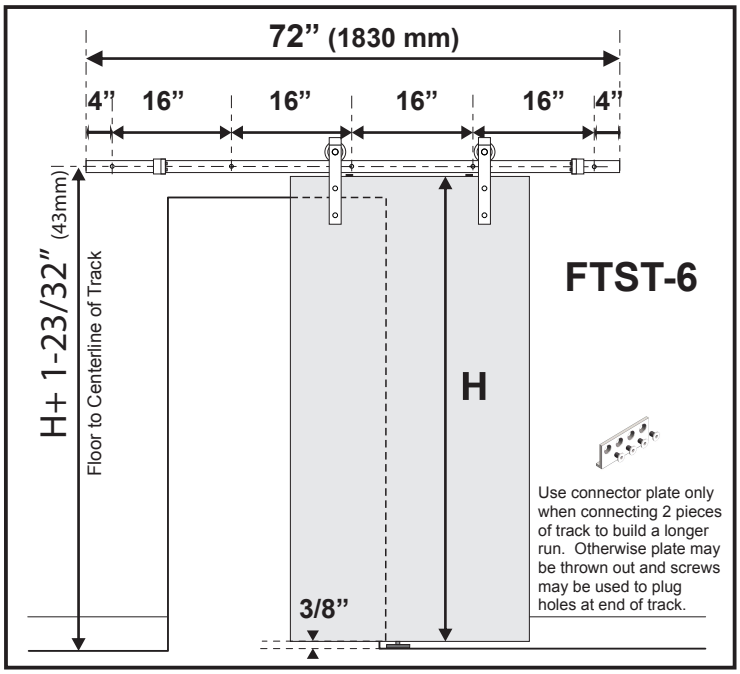

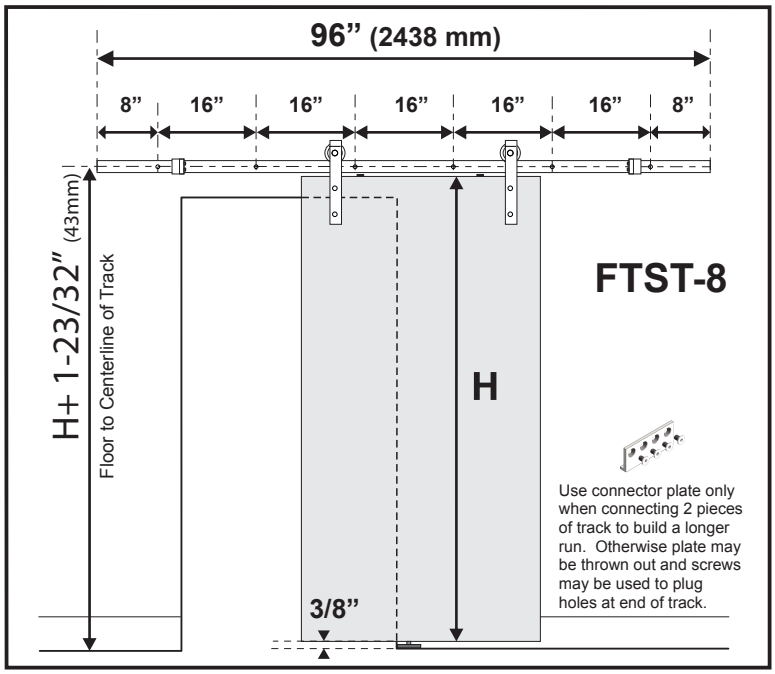

Tools Required:

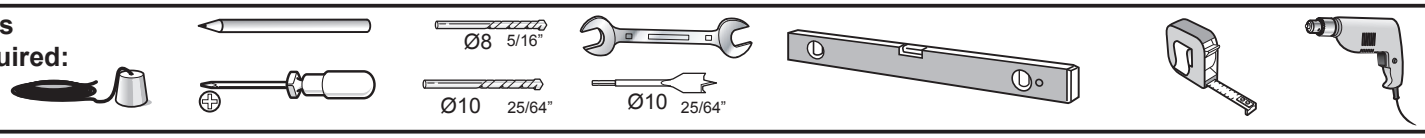

1a

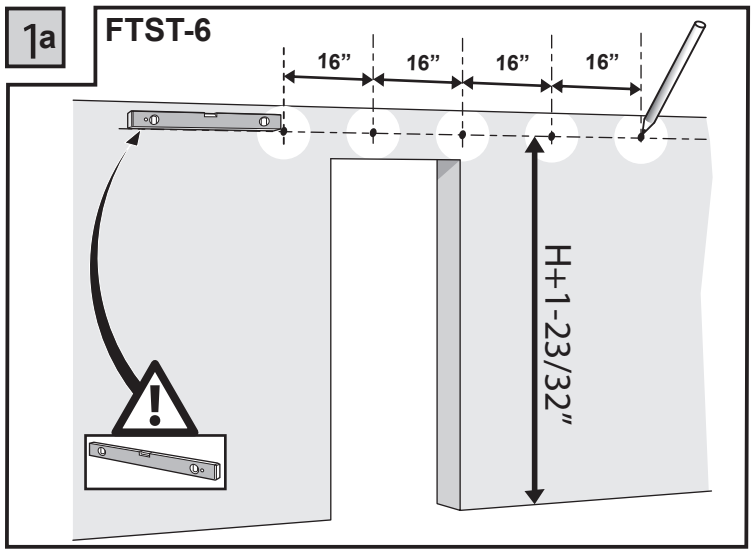

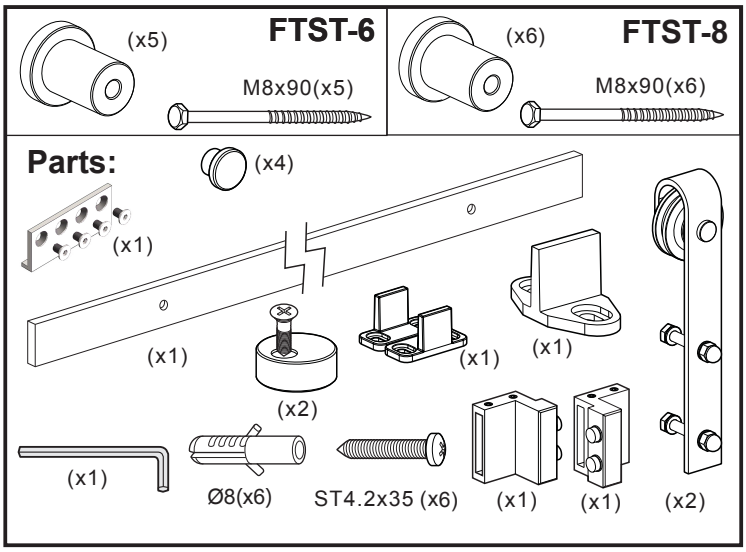

1b

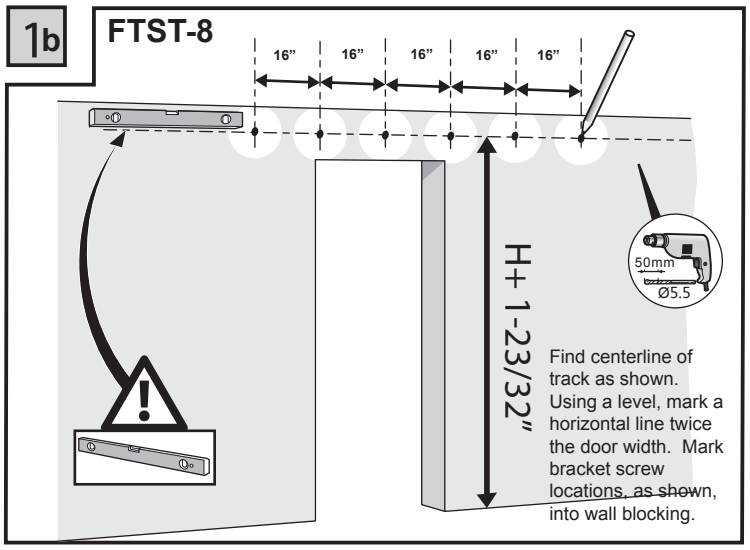

2

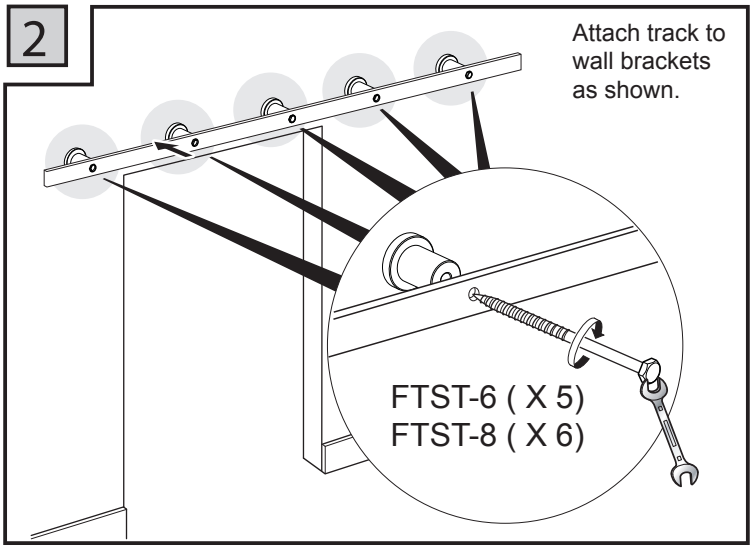

3

Mount hangers to door. Width and style of door determines horizontal placement of hangers.

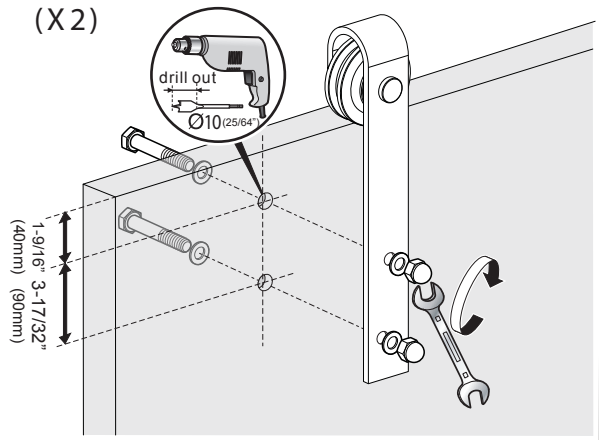

4

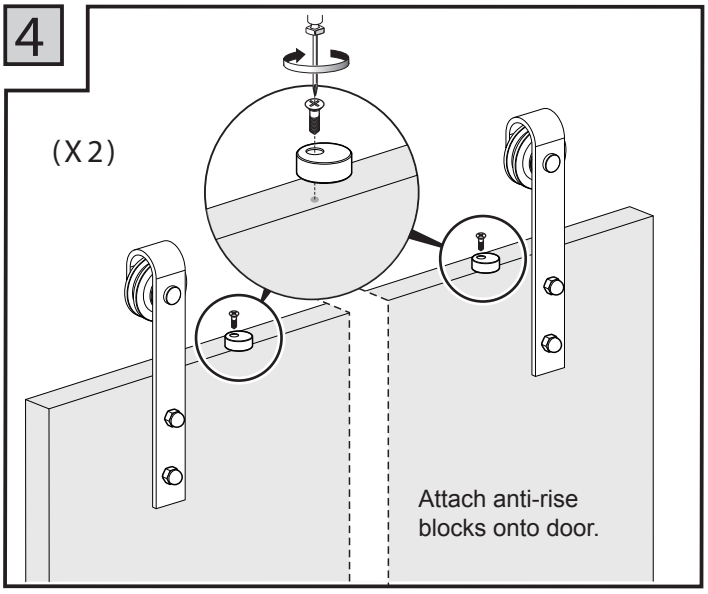

5

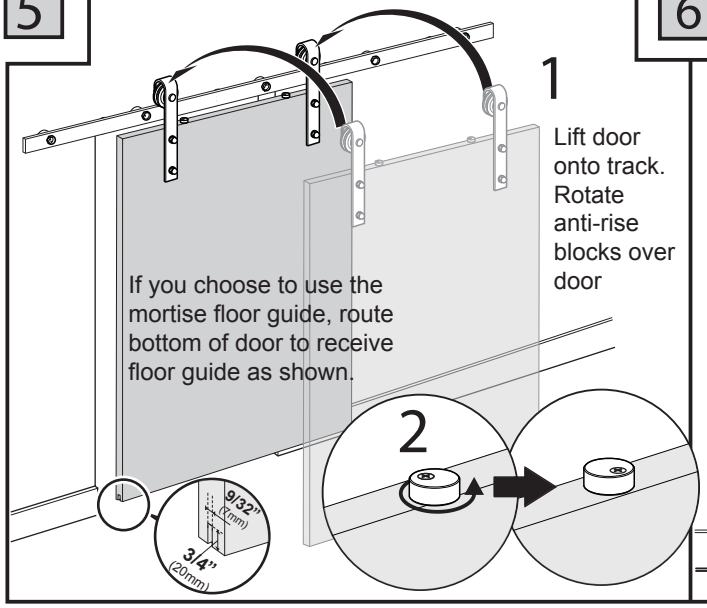

6

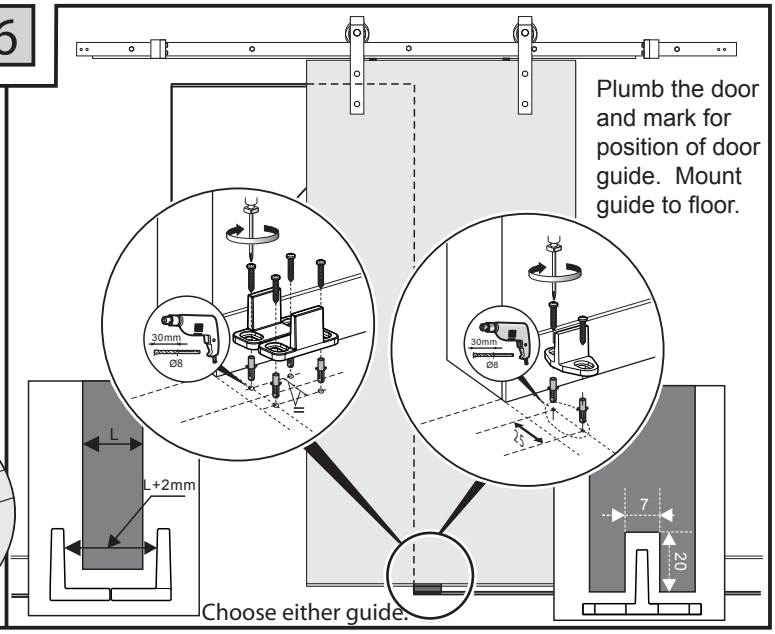
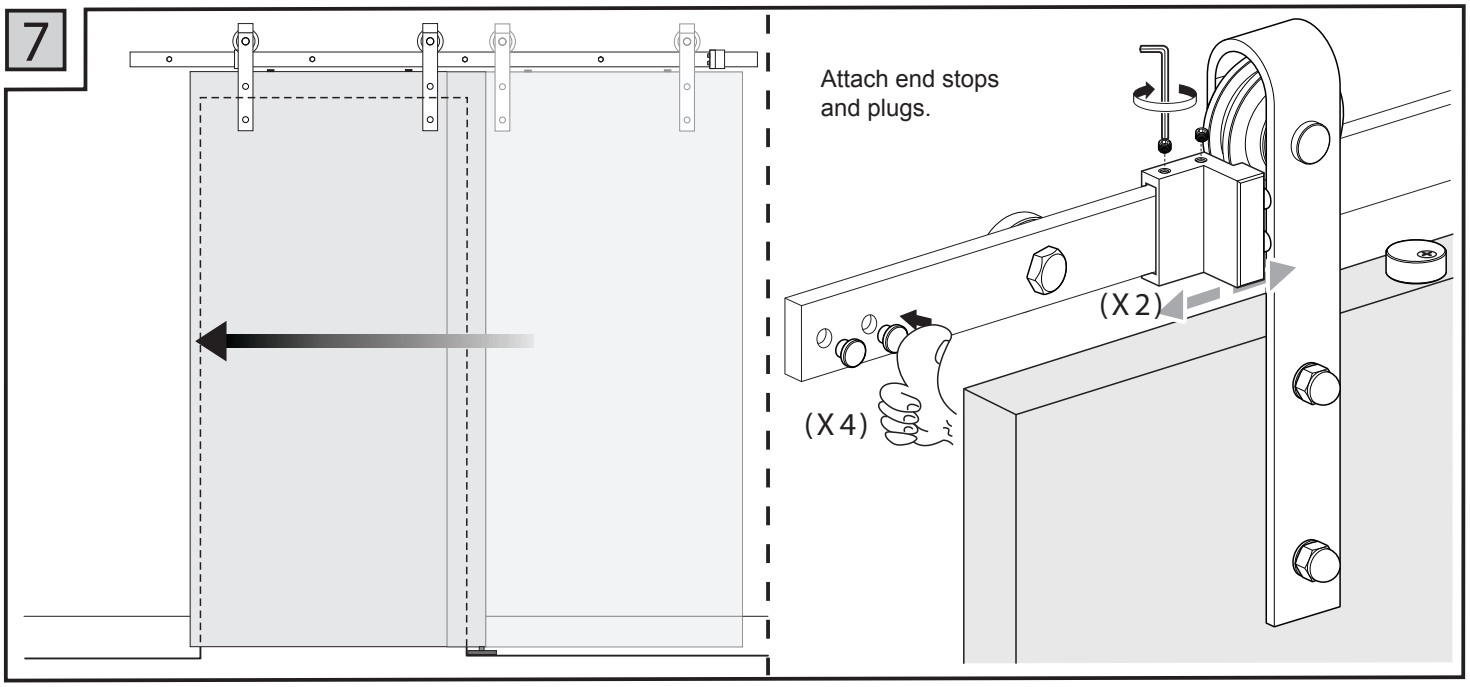
7