FTSK-8C INSTALLATION INSTRUCTIONS

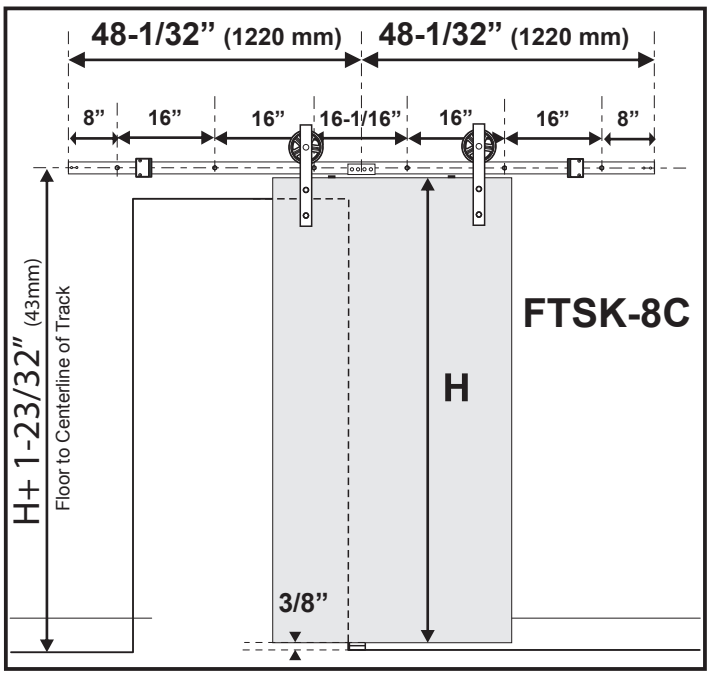

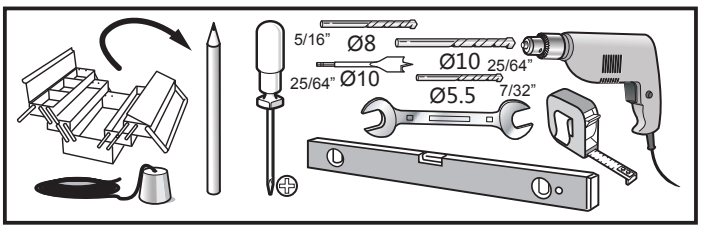

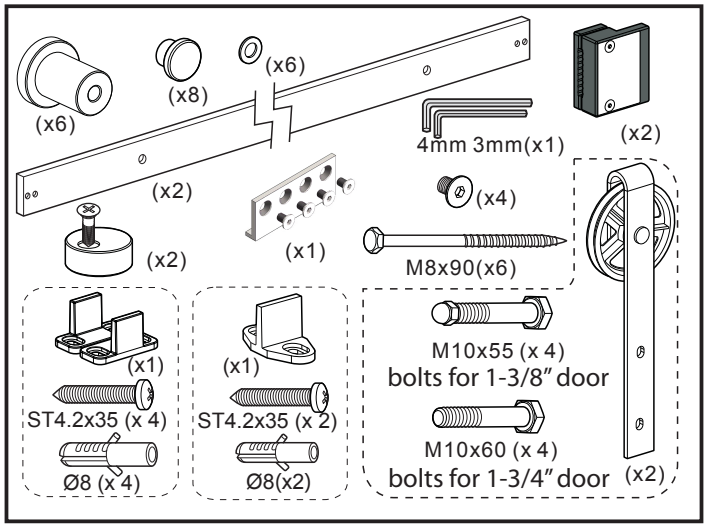

1

Find centerline of track as shown. Using a level, mark a horizontal line twice the door width.

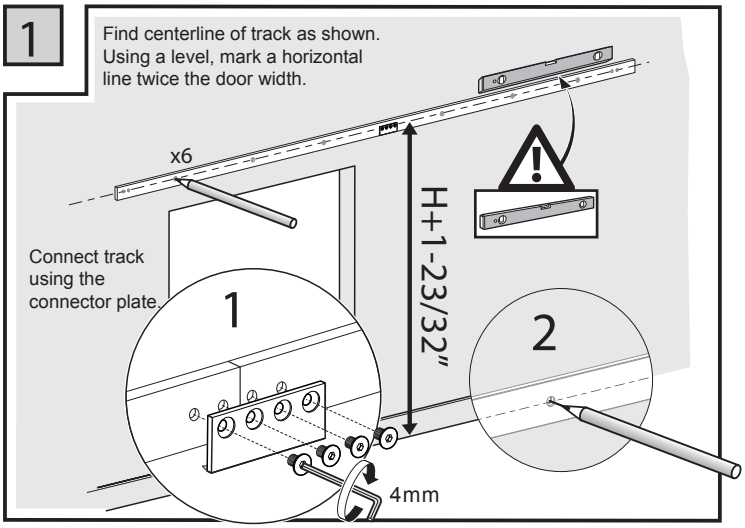

2

Mark bracket screw locations, as shown, into wall blocking.

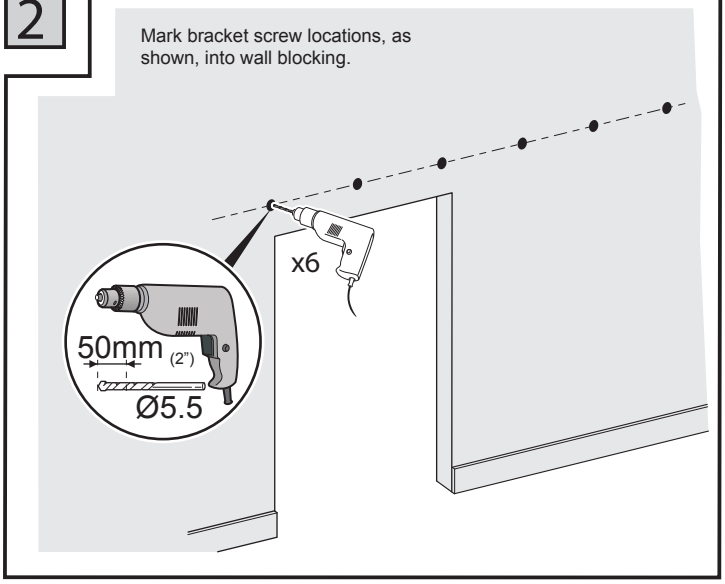

3

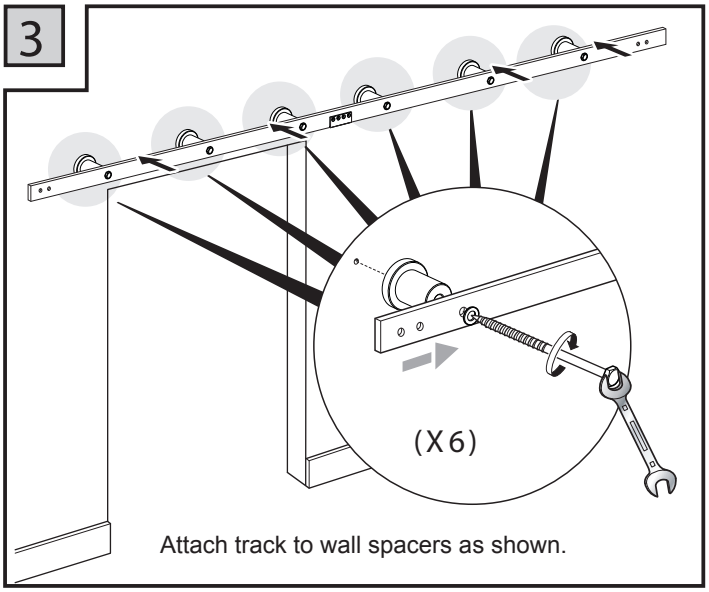

Attach track to wall spacers as shown.

4

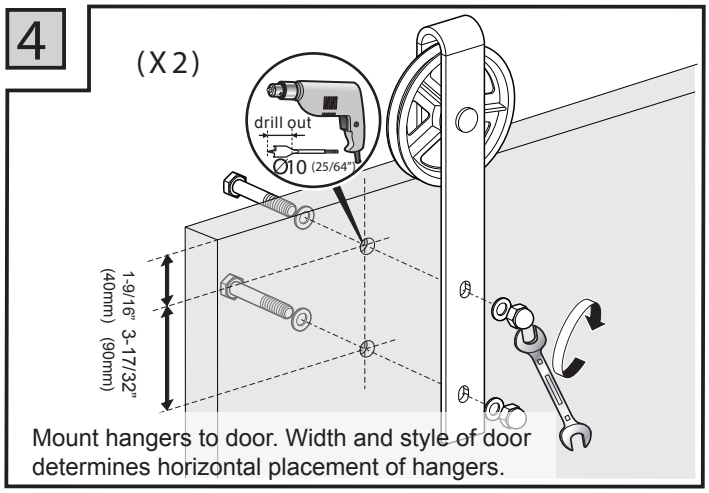

Mount hangers to door. Width and style of door determines horizontal placement of hangers.

5

Attach anti-jump blocks onto door.

(X 2)

6

1

Lift door onto track. Rotate anti-jump blocks over door

2

7

30mm

Ø8

L

L+2mm

7

20

Choose either guide.

8

Attach door stops.

9

Attach plugs.

(X 4)

3mm

(X 2)

Version FTSK-8C 1-1